55W Single Output with Battery Charger(UPS Function) AD-55 series

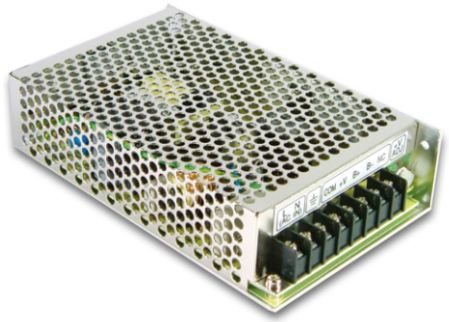

■ Features :

- Universal AC input / Full range
- Protections: Short circuit / Overload / Over voltage
- Battery low protections
- Cooling by free air convection
- 100% full load burn-in test
- Fixed switching frequency at 45KHz
- 2 years warranty

UL62368-1 EN62368-1 IEC62368-1 TPTC004

SPECIFICATION

MODEL		AD-55A		AD-55B	
OUTPUT	OUTPUT NUMBER	CH1	CH2	CH1	CH2
	DC VOLTAGE	13.8V	13.4V	27.6V	26.5V
	RATED CURRENT	3.5A	0.23A	1.8A	0.16A
	CURRENT RANGE	0 ~ 4A	--------	0 ~ 2A	--------
	RATED POWER	51.38W		53.92W	
	RIPPLE & NOISE (max.) Note.2	100mVp-p	--------	100mVp-p	--------
	VOLTAGE ADJ. RANGE	CH1: 12 ~ 14.5V		CH1: 24 ~ 29V	
	VOLTAGE TOLERANCE Note.3	±1.0%	--------	±1.0%	--------
	LINE REGULATION	±0.5%	--------	±0.5%	--------
	LOAD REGULATION	±0.5%	--------	±0.5%	--------
	SETUP, RISE TIME	800ms, 50ms/230VAC 1600ms, 50ms/115VAC at full load			
	HOLD UP TIME (Typ.)	80ms/230VAC 16ms/115VAC at full load			
INPUT	VOLTAGE RANGE	88 ~ 264VAC 124 ~ 370VDC			
	FREQUENCY RANGE	47 ~ 63Hz			
	EFFICIENCY (Typ.)	71%		74%	
	AC CURRENT (Typ.)	1.6A/115VAC 1A/230VAC			
	INRUSH CURRENT (Typ.)	COLD START 20A/115VAC 40A/230VAC			
	LEAKAGE CURRENT	<1mA / 240VAC			
PROTECTION	OVERLOAD	105 ~ 150% rated output power			
		Protection type : AC Charging Mode : Hiccup mode, recovers automatically after fault condition is removed UPS Mode : Protected by internal fuse			
	OVER VOLTAGE	CH1:15.87 ~ 18.63V		CH1:31.74 ~ 37.26V	
		Protection type : Hiccup mode, recovers automatically after fault condition is removed			
	BATTERY LOW	9.5 ~ 11V		20 ~ 22V	
FUNCTION	DC ALARM SIGNAL(OPTIONAL)	AC fail CN1 PIN2			
		Battery low under charge voltage 82.5%±2% CN1 PIN1			
		Normal 0.8V max. Abnormal 5V±0.5V			
ENVIRONMENT	WORKING TEMP.	-10 ~ +60℃ (Refer to "Derating Curve")			
	WORKING HUMIDITY	20 ~ 90% RH non-condensing			
	STORAGE TEMP., HUMIDITY	-20 ~ +85℃, 10 ~ 95% RH			
	TEMP. COEFFICIENT	±0.03%/℃ (0~50℃) on CH1 output			
	VIBRATION	10 ~ 500Hz, 2G 10min./1cycle, 60min. each along X, Y, Z axes			
SAFETY & EMC (Note 4)	SAFETY STANDARDS	UL62368-1, TUV EN62368-1, EAC TP TC 004 approved			
	WITHSTAND VOLTAGE	I/P-O/P:3KVAC I/P-FG:2KVAC O/P-FG:0.5KVAC			
	ISOLATION RESISTANCE	I/P-O/P, I/P-FG, O/P-FG:100M Ohms / 500VDC / 25℃/ 70% RH			
	EMC EMISSION	Compliance to EN55032 (CISPR32) Class B, EN61000-3-2,-3, EAC TP TC 020			
	EMC IMMUNITY	Compliance to EN61000-4-2,3,4,5,6,8,11, EN55024, light industry level, criteria A, EAC TP TC 020			
OTHERS	MTBF	304.3K hrs min. MIL-HDBK-217F (25℃)			
	DIMENSION	159*97*38mm (L*W*H)			
	PACKING	0.5Kg; 24pcs/12.6Kg/0.75CUFT			
NOTE	1. All parameters NOT specially mentioned are measured at 230VAC input, rated load and 25℃ of ambient temperature. 2. Ripple & noise are measured at 20MHz of bandwidth by using a 12" twisted pair-wire terminated with a 0.1uf & 47uf parallel capacitor. 3. Tolerance : includes set up tolerance, line regulation and load regulation. 4. The power supply is considered a component which will be installed into a final equipment. All the EMC tests are been executed by mounting the unit on a 360mm*360mm metal plate with 1mm of thickness. The final equipment must be re-confirmed that it still meets EMC directives. For guidance on how to perform these EMC tests, please refer to "EMI testing of component power supplies." (as available on http://www.meanwell.com) 5. The ambient temperature derating of 3.5℃/1000m with fanless models and of 5℃/1000m with fan models for operating altitude higher than 2000m(6500ft).				

Mechanical Specification

Case No. 901 Unit:mm

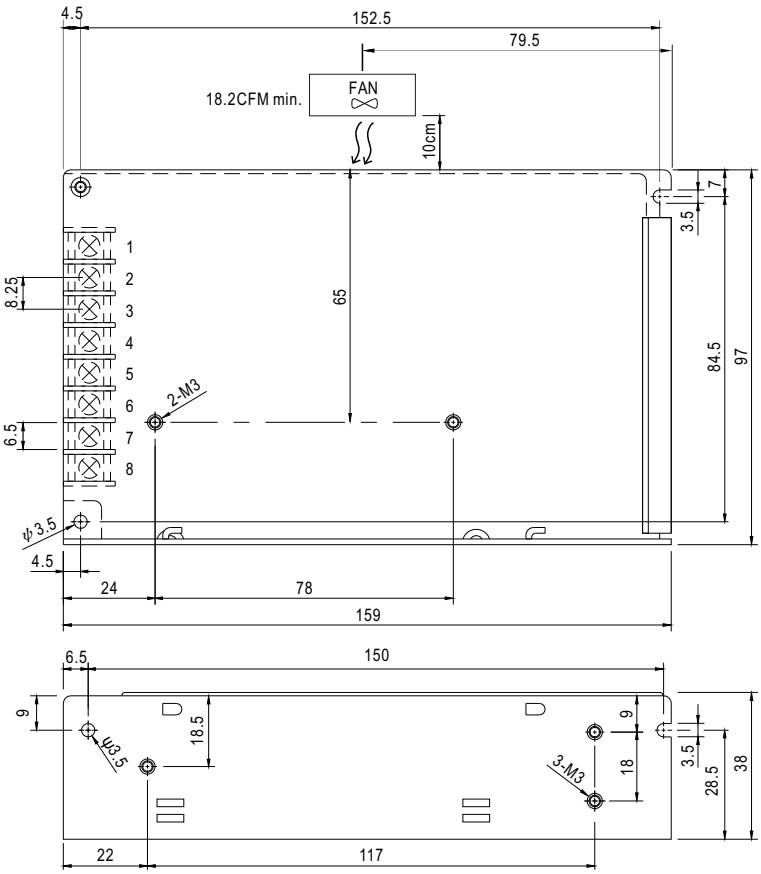

Terminal Pin No. Assignment :

Pin No.	Assignment	Pin No.	Assignment
1	AC/L	5	DC OUTPUT +V
2	AC/N	6	BAT. +
3	FG ⏚	7	BAT.-/COM
4	DC OUTPUT COM	8	NC

Block Diagram

fosc : 45KHz

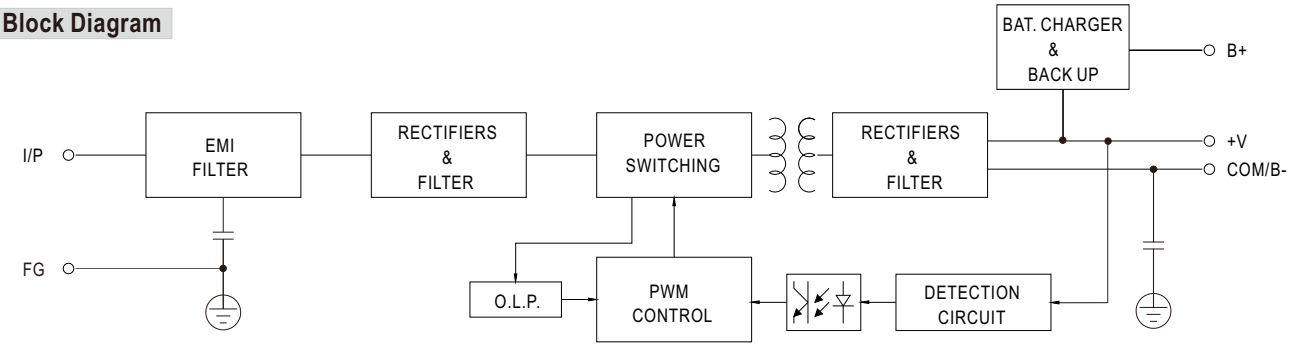

Derating Curve

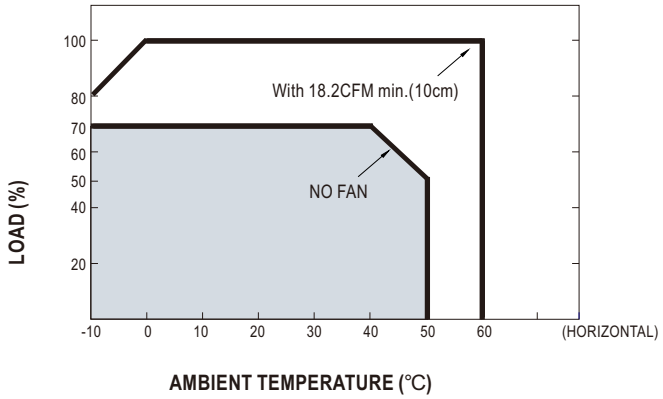
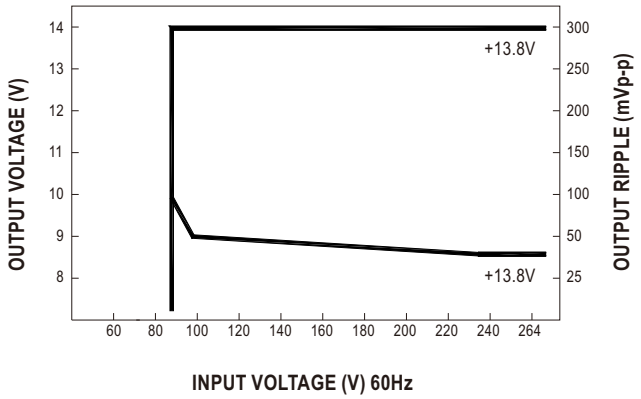
Static Characteristics (A)